NAPA New Britain

NEW TOOLS

GYRO FLEX RATCHET

This amazing new ratchet will allow you to reach the most inaccessible places in automotive work. Constructed of alloy steel, this tool has a precision engineered offset handle, which combined with a flex head, allows an unlimited number of positions. A must for all tune-up work.

Number	Drive	Length	Weight
NB-57	3/8″	10½″	¾ Lb.

VOLKSWAGEN DRAIN PLUG WRENCH

This 17mm hex wrench is designed to be used on Volkswagen transmission, drain and filler plugs. This wrench is made of alloy steel, drop forged and triple plated (copper, nickel, chrome) for long life. 2″ long, this handy wrench fits all 3/8″ drive tools.

Number	Size	Length	Weight
R-52	17mm	2″	3 oz.

RATCHET SPINNER

This precision designed ratchet attachment fits all 3/8″ drive tools, allowing rapid run up of nuts, bolts and spark plugs. Custom designed plastic finger grip is oil resistant. Extension is alloy steel, triple plated (copper, nickel, chrome) for long life.

Number	Size	Length	Weight
NB-15	3/8″ Dr.	1 13/16″	2 oz.

METRIC SOCKETS

(6mm and 7mm) These 3/8″ drive sockets are made of alloy steel and are thin walled to permit easy access to bolts and nuts. These sockets are triple plated (copper, nickel, chrome). Precision broached to assure accurate fit. A must for later model foreign cars.

Number	Point	Opening	Weight
NB-606M	6	6mm	¾ oz.
NB-607M	6	7mm	¾ oz.

METRIC WRENCHES

(6mm and 7mm) These wrenches are made of alloy steel. They are drop forged, precision broached for long life and accuracy. Tapered for easy access. Triple plated (copper, nickel, chrome). Many new applications on the newer foreign cars.

Number	Point	Opening	Weight
NDM-46	6	6mm	1 oz.
NDM-47	6	7mm	1 oz.

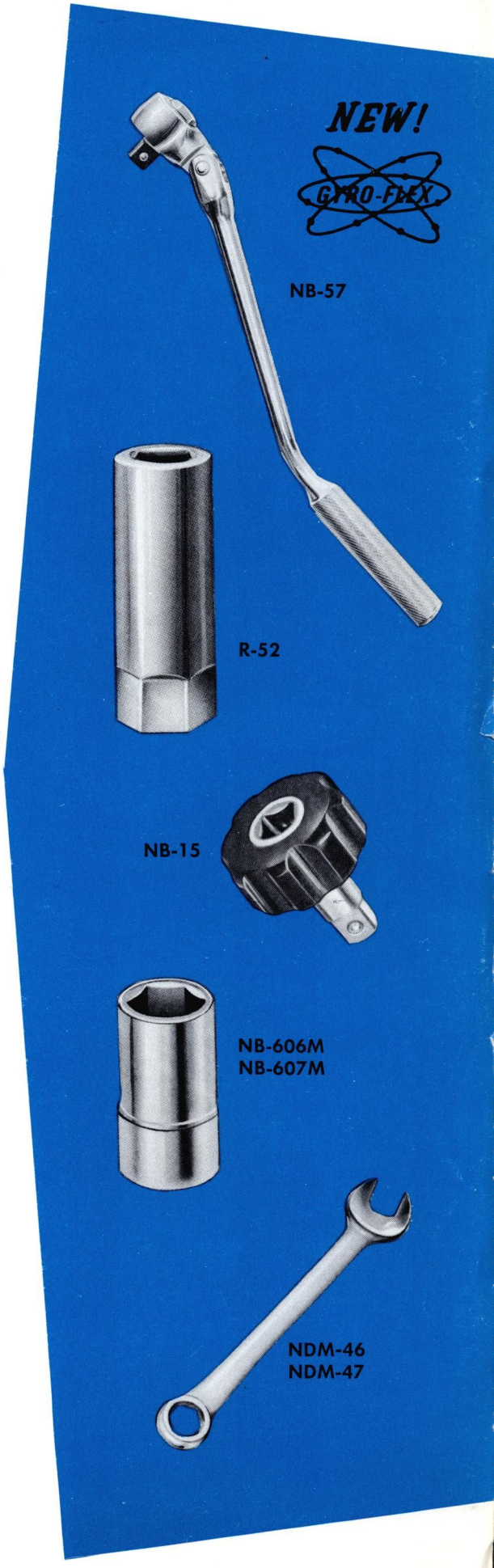

NEW TOOLS

NAPA New Britain

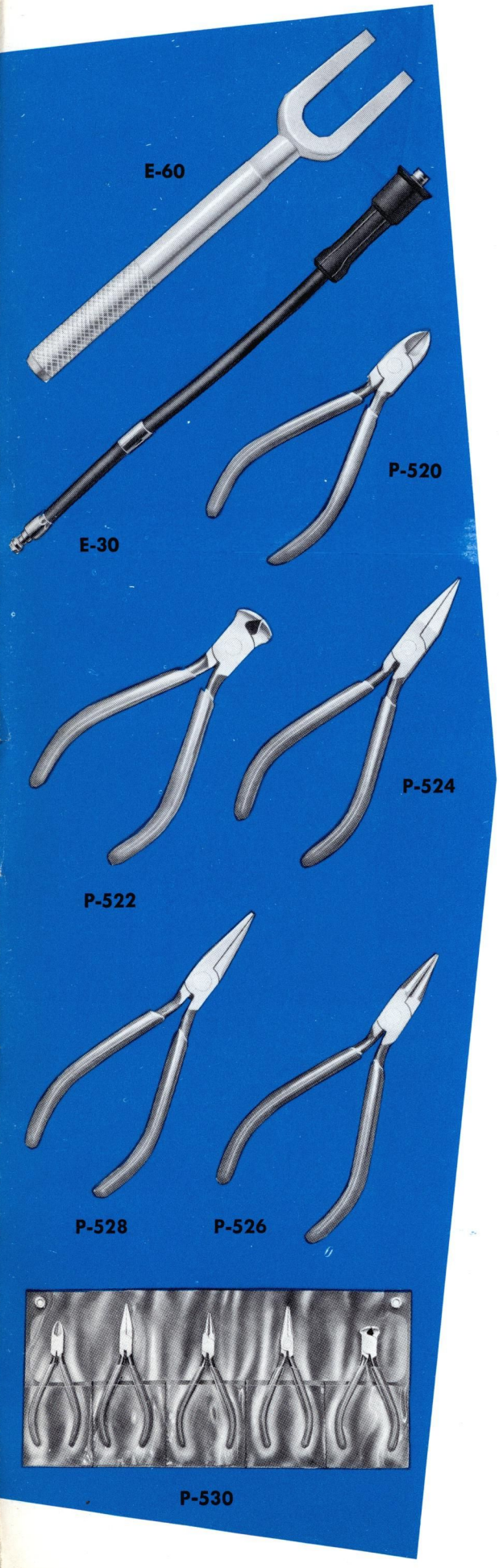

BALL JOINT SEPARATOR

Made of alloy steel, this tool is built for rugged use. Simply place prongs between ball joint and steering knuckle, a few sharp blows with a hammer will easily separate the ball joint.

Number	Opening	Length	Weight
E-60	15/16"	11 7/8"	2 Lbs.

SPARK PICK-UP ADAPTER

This tool is used for quick spark pick-ups on all plugs. Made of high quality wire with insulated neoprene covering. Standard connections on both ends eliminates the need to puncture or cut existing connections.

Number	Length
E-30	9"

MIDGET PLIERS

New Britain midget pliers are drop forged from alloy steel, accurately machined, heat treated and tested for highest quality. Cutting edges are hand ground. All have oil and chemical resistant vinyl grips. Styles are carefully selected for precision work. All styles are 4-1/2" long.

Midget Diagonal Cutting Pliers — semi-flush edges for close, accurate cutting.

Number	Size	Weight
P-520	4½"	3 oz.

Midget End Cutting Nippers — high leverage semi-flush cutting.

Number	Size	Weight
P-522	4½"	3 oz.

Midget Needle Nose Pliers — slender jaws taper to a needle point.

Number	Size	Weight
P-524	4½"	3 oz.

Midget Round Nose Pliers — tapered, round jaws form accurate loops.

Number	Size	Weight
P-526	4½"	3 oz.

Midget Flat Nose Pliers — flat, wide jaws for stronger gripping.

Number	Size	Weight
P-528	4½"	3 oz.

Midget Plier Set — contains the five above pliers packaged in an attractive reusable vinyl kit.

Number	Weight
P-530	1 Lb.

NAPA New Britain

NEW TOOLS

1" DRIVE 6 POINT IMPACT SOCKETS

These rugged, heavy duty sockets are precision engineered and built for industrial, construction and truck jobs. They are made of alloy steel, drop forged, oil tempered with a black oxide finish for long life and durability.

Number	Size	Length	Weight
NL-1400	3/4"	2 1/4"	1 Lb.
NL-1402	7/8"	2 9/32"	1 Lb.
NL-1404	15/16"	2 9/32"	1 Lb.
NL-1406	1"	2 13/32"	1 Lb.
NL-1408	1 1/16"	2 13/32"	1 Lb.
NL-1410	1 1/8"	2 13/32"	1 Lb.
NL-1412	1 3/16"	2 19/32"	1 1/2 Lb.
NL-1414	1 1/4"	2 17/32"	1 1/2 Lb.
NL-1416	1 5/16"	2 17/32"	1 1/2 Lb.
NL-1418	1 3/8"	2 1/2"	1 1/2 Lb.
NL-1420	1 7/16"	2 1/2"	1 1/2 Lb.
NL-1422	1 1/2"	2 1/2"	1 1/2 Lb.
NL-1426	1 9/16"	2 1/2"	1 3/4 Lb.
NL-1428	1 5/8"	2 1/2"	1 3/4 Lb.
NL-1430	1 11/16"	2 5/8"	1 3/4 Lb.
NL-1432	1 3/4"	2 5/8"	2 1/2 Lb.
NL-1434	1 13/16"	2 5/8"	2 1/2 Lb.
NL-1436	1 7/8"	2 3/4"	2 1/2 Lb.
NL-1438	1 15/16"	2 3/4"	2 3/4 Lb.
NL-1440	2"	2 7/8"	2 3/4 Lb.
NL-1442	2 1/16"	2 7/8"	2 3/4 Lb.
NL-1444	2 1/8"	3"	3 1/4 Lb.
NL-1446	2 3/16"	3"	3 1/2 Lb.
NL-1448	2 1/4"	3"	3 Lb.
NL-1450	2 5/16"	3 1/16"	3 3/4 Lb.
NL-1452	2 3/8"	3 1/16"	3 1/2 Lb.
NL-1454	2 7/16"	3 1/8"	3 1/2 Lb.
NL-1456	2 1/2"	3 3/16"	3 1/2 Lb.

"O" RINGS

Number		Suggested Mech. Net
NL-1500	— For Part Numbers — NL-1400 Through NL-1430	$ .49
NL-1502	— For Part Numbers — NL-1432 Through NL-1456	.49

RETAINING PINS

NL-1506	— For Part Numbers — NL-1400 Through NL-1430	$ .19
NL-1508	— For Part Numbers — NL-1432 Through NL-1456	.19

MICROMETER STANDARD TEST GAUGES

These gauges are made of high quality alloy steel. They are hardened and ground to resist wear and give long life. Plated to prevent rusting.

Number	Description
M-314	1" Standard Test Gauge (or 25mm)
M-315	2" Standard Test Gauge (or 50mm)
M-316	3" Standard Test Gauge (or 75mm)
M-317	4" Standard Test Gauge (or 100mm)
M-318	5" Standard Test Gauge (or 125mm)

13-PIECE DRILL SET

Contains 13 of the most popular drills in sizes 1/16" to 1/4". Packed in sturdy reusable plastic case.

Number	Weight
HSD-1110	1/4 Lb.

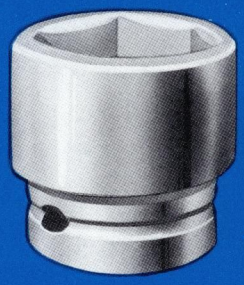

NL-1400 to NL-1432

NL-1434 to NL-1456

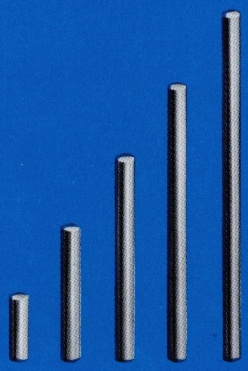

M-314 to M-318

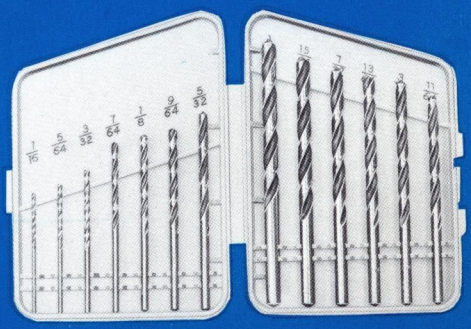

HSD-1110

NEW TOOLS

NAPA New Britain

INSPECTION MIRROR

This handy mirror allows fast, visual inspection of all hidden areas. The double ball joint permits easy viewing to 360°. Mirror telescopes to 14″. Specially designed non-rotating hex rod prevents mirror from swinging out of alignment. Mirror has a vinyl insulated handle.

Number	Max. Length	Weight
MH-20	14″	3 oz.

POWER CHISEL TOOLS

The following sequence of New Britain Power chisels has been designed to deliver the maximum driving power in most quality brand power hammers. The use of shock resisting Alloy Steel assures a longer life of cutting edges. Polished shanks are round in design and are .401″ in diameter to fit all models of small hammers. All power tools are packaged in an attractive blister pack.

INSIDE MUFFLER CUTTER

Made of alloy steel, the convex cutting edge is designed to fit the inside of mufflers.

Number	Length
991	8½″

PANEL CUTTER

Designed for straight or radial cuts with the cut curling away. Use on body and door panels, air ducts, etc.

Number	Length
996	6″

SPOT WELD BREAKER

Extra rugged in design, this tool may be used to cut away weld spots, obstructions, rivets and molding.

Number	Length
998	6¼″

TAPER PUNCH

This handy tool has many uses. Punching holes, driving rivets and king pins, peening and crimping of sheet metal are but a few.

Number	Length
1000	6¾″

SHARP POINT TAPER PUNCH

Extra sharp point goes through metal fast. Use for screw and wire holes. A must for seat belt installation.

Number	Length
1002	6¾″

Printed in U.S.A.